A1

PROPOSED MULTI-UNIT FLAT BUILDING
21 ATKINSON STREET, LIVERPOOL

STORMWATER CONCEPT DESIGN

sgc

LOCALITY PLAN

DRAWING REGISTER		
No.	TITLE	REV
SW01	COVER SHEET	B
SW02	STORMWATER CONCEPT DESIGN - GROUND FLOOR PLAN	B
SW03	STORMWATER CONCEPT DESIGN - LEVEL 1 PLAN	B
SW04	STORMWATER CONCEPT DESIGN - LEVEL 3 PLAN	B
SW05	SEDIMENT AND EROSION CONTROL - PLAN AND DETAILS	B
SW06	STORMWATER CONCEPT DESIGN - DETAILS SHEET	B
SW07	STORMWATER CONCEPT DESIGN - MUSIC CATCHMENT PLAN	B

Drawing Title

COVER SHEET

Project Number	Drawing Number	Revision Number
20150209	SW01	B

Sheet 1 of 7 | Issue FOR APPROVAL

DATE PLOTTED: 16 August 2016 4:53 PM BY : SGCEMACG

XREF: 1
LOD FILE: \\Nas\SGCE_Data\Production\2015\20150209 21 Atkinson Street, Liverpool\Civil\cad\SW01.dwg

A1

DATE PLOTTED: 16 August 2016 4:53 PM BY : SGCEMALS

Issue	Last revision title	by	Date	Status
B	SUBMISSION TO COUNCIL	ZZ	16.08.16	2
A	SUBMISSION TO COUNCIL	ZZ	03.02.16	2

Issuer internal sequence and revision history

1-preliminary 2-development application 3-construction certificate
4-tender 5-construction 6-other

Reference Coordination Drawing

Discipline	Drawing Title and Number	Date	Rev.
ARCH	AP 04	09.08.16	
ARCH			
STRUCT			
MECH			
ELEC			
HYD			
FIRE			
LANDS			
CIVIL			
SURVEY	DETL-001A	04.11.15	

ENGINEERS AUSTRALIA Chartered Professional Engineer MEMBER

DIMENSIONS NOT SHOWN TO BE CHECKED ON SITE. DO NOT SCALE OF THIS DRAWING. POSITIONS OF AUTHORITIES MAINS AND/OR EXISTING SERVICES ARE TO BE CHECKED PRIOR TO COMMENCEMENT OF WORK. REPORT ANY DISCREPANCIES TO THE CONSULTING ENGINEER FOR DECISION/CLARIFICATION BEFORE PROCEEDING WITH THE WORK. THIS DRAWING IS TO BE READ IN CONJUNCTION WITH THE SPECIFICATIONS AND OTHER CONSULTANTS' DRAWINGS.

QUALITY CONTROL

DRAWN	DATE
CHECKED	DATE
DESIGNED	DATE
VERIFIED	DATE
APPROVED	DATE

WARNING: THE DESIGNS, DRAWINGS, SPECIFICATIONS AND THE COPYRIGHT HEREIN REMAIN THE SOLE INTELLECTUAL PROPERTY OF S&G CONSULTANTS PTY LTD AND MUST NOT BE USED, COPIED, ALTERED OR REPRODUCED WHOLLY OR IN PART IN ANY FORM WITHOUT THE WRITTEN CONSENT OF S&G CONSULTANTS PTY LTD

Scales

0m 2 4 6 8 10
SCALE 1:200 ON ORIGINAL SIZE

CLIENT
SYNERGY DEVELOPMENT GROUP

ARCHITECT
mpa
mosca pserras architects
p 02 9601 3244 f 02 9601 6336
a po box 3353, liverpool westfield nsw 2170

CONSULTING ENGINEER
S&G CONSULTANTS PTY LIMITED
A.B.N. 21 118 222 530
sgc
Ste 412, Level 4,
14-16 LEXINGTON DRIVE
BELLA VISTA, NSW 2153
T: +61 2 8883 4239
F: +61 2 9672 6977
Email: office@sgce.com.au
Web: www.sgce.com.au

PROJECT
PROPOSED MULTI-UNIT FLAT BUILDING
21 ATKINSON STREET, LIVERPOOL

Grid	Datum	Sheet	Scale (at original size)
-	A.H.D.	2 of 6	1:200 @ A1

Drawing Status: FOR APPROVAL
NOT TO BE USED FOR CONSTRUCTION PURPOSES

Drawing Title
STORMWATER CONCEPT DESIGN
GROUND FLOOR PLAN

Project No	Drawing No	Revision No
20150209	SW02	B

20150209 Atkinson St\Models\SGCE_Data\Production\20150209 21 Atkinson Street, Liverpool\Civil\Civil\SW02.dwg

A1

DATE PLOTTED: 16 August 2016 4:53 PM BY : SGCEMALS

Issue	Last revision title	by	Date	Status
B	SUBMISSION TO COUNCIL	ZZ	16.08.16	2
A	SUBMISSION TO COUNCIL	ZZ	03.02.16	2

Issuer internal sequence and revision history

1-preliminary 2-development application 3-construction certificate
4-tender 5-construction 6-other

Reference Coordination Drawing

Discipline	Drawing Title and Number	Date	Rev.
ARCH	AP 04	09.08.16	
ARCH			
STRUCT			
MECH			
ELEC			
HYD			
FIRE			
LANDS			
CIVIL			
SURVEY	DETL-001A	04.11.15	

ENGINEERS AUSTRALIA
Chartered Professional Engineer
MEMBER

DIMENSIONS NOT SHOWN TO BE CHECKED ON SITE. DO NOT SCALE OF THIS DRAWING. POSITIONS OF AUTHORITIES MAINS AND/OR EXISTING SERVICES ARE TO BE CHECKED PRIOR TO COMMENCEMENT OF WORK. REPORT ANY DISCREPANCIES TO THE CONSULTING ENGINEER FOR DECISION/CLARIFICATION BEFORE PROCEEDING WITH THE WORK. THIS DRAWING IS TO BE READ IN CONJUNCTION WITH THE SPECIFICATIONS AND OTHER CONSULTANTS' DRAWINGS.

QUALITY CONTROL

DRAWN	DATE
CHECKED	DATE
DESIGNED	DATE
VERIFIED	DATE
APPROVED	DATE

WARNING: THE DESIGNS, DRAWINGS, SPECIFICATIONS AND THE COPYRIGHT HEREIN REMAIN THE SOLE INTELLECTUAL PROPERTY OF S&G CONSULTANTS PTY LTD AND MUST NOT BE USED, COPIED, ALTERED OR REPRODUCED WHOLLY OR IN PART IN ANY FORM WITHOUT THE WRITTEN CONSENT OF S&G CONSULTANTS PTY LTD

Scales

0m 2 4 6 8 10
SCALE 1:200 ON ORIGINAL SIZE

CLIENT
SYNERGY
DEVELOPMENT GROUP

ARCHITECT
mpa
mosca pserras architects
p 02 9601 3244 f 02 9601 6336
a po box 3353, liverpool westfield nsw 2170

CONSULTING ENGINEER
S&G CONSULTANTS PTY LIMITED
A.B.N. 21 118 222 538
sgc
Ste 412, Level 4,
14-16 LEXINGTON DRIVE
BELLA VISTA, NSW 2153
T: +61 2 8883 4239
F: +61 2 9672 6977
Email: office@sgce.com.au
Web: www.sgce.com.au

PROJECT
PROPOSED MULTI-UNIT
FLAT BUILDING
21 ATKINSON STREET, LIVERPOOL

Drawing Status
FOR APPROVAL
NOT TO BE USED FOR CONSTRUCTION PURPOSES

Drawing Title
STORMWATER CONCEPT DESIGN
LEVEL 1 PLAN

Grid	Datum	Sheet	Scale (at original size)
-	A.H.D.	3 of 6	1:200 @ A1

Project No	Drawing No	Revision No
20150209	SW03	B

PATH: Z:\Mac\SGCE_Data\Production\2015\20150209 21 Atkinson Street Liverpool\Cad\Cad\SW03.dwg

A1

DATE PLOTTED: 16 August 2016 4:53 PM BY : SGCEDMG4

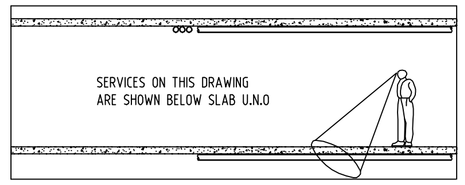

ROOF DOWNPIPE COLLECTING STORMWATER FROM ROOF AREA ONLY. (TYP.)

DOWNPIP COLLECTING STORMWATER FROM LEVELS ABOVE. (TYP.)

RAINWATER OUTLET COLLECTING STORMWATER RUNOFF FROM HARDSTAND AREA (TYP.)

DOWNPIPE DROPS DOWN TO NEXT LEVEL BELOW. (TYP.)

Issue	Last revision title	by	Date	Status
B	SUBMISSION TO COUNCIL	ZZ	16.08.16	2
A	SUBMISSION TO COUNCIL	ZZ	03.02.16	2

Issuer internal sequence and revision history

1-preliminary 2-development application 3-construction certificate
4-tender 5-construction 6-other

Reference Coordination Drawing

Discipline	Drawing Title and Number	Date	Rev.
ARCH	AP 05	09.08.16	
ARCH			
STRUCT			
MECH			
ELEC			
HYD			
FIRE			
LANDS			
CIVIL			
SURVEY	DETL-001A	04.11.15	

ENGINEERS AUSTRALIA. Chartered Professional Engineer MEMBER

DIMENSIONS NOT SHOWN TO BE CHECKED ON SITE. DO NOT SCALE OF THIS DRAWING. POSITIONS OF AUTHORITIES MAINS AND/OR EXISTING SERVICES ARE TO BE CHECKED PRIOR TO COMMENCEMENT OF WORK. REPORT ANY DISCREPANCIES TO THE CONSULTING ENGINEER FOR DECISION/CLARIFICATION BEFORE PROCEEDING WITH THE WORK. THIS DRAWING IS TO BE READ IN CONJUNCTION WITH THE SPECIFICATIONS AND OTHER CONSULTANTS' DRAWINGS.

QUALITY CONTROL

DRAWN	DATE
CHECKED	DATE
DESIGNED	DATE
VERIFIED	DATE
APPROVED	DATE

WARNING. THE DESIGNS, DRAWINGS, SPECIFICATIONS AND THE COPYRIGHT HEREIN REMAIN THE SOLE INTELLECTUAL PROPERTY OF S&G CONSULTANTS PTY LTD AND MUST NOT BE USED, COPIED, ALTERED OR REPRODUCED WHOLLY OR IN PART IN ANY FORM WITHOUT THE WRITTEN CONSENT OF S&G CONSULTANTS PTY LTD

Scales

0m 2 4 6 8 10
SCALE 1:200 ON ORIGINAL SIZE

CLIENT
SYNERGY DEVELOPMENT GROUP

ARCHITECT
mpa mosca pserras architects
p 02 9601 3244 f 02 9601 6336
a po box 3353, liverpool westfield nsw 2170

CONSULTING ENGINEER
S&G CONSULTANTS PTY LIMITED
A.B.N. 21 118 222 530
Ste 412, Level 4,
14-16 LEXINGTON DRIVE
BELLA VISTA, NSW 2153
T: +61 2 8883 4239
F: +61 2 9672 6977
Email: office@sgce.com.au
Web: www.sgce.com.au

PROJECT
PROPOSED MULTI-UNIT FLAT BUILDING
21 ATKINSON STREET, LIVERPOOL

Grid	Datum	Sheet	Scale (at original size)
-	A.H.D.	4 of 7	1:200 @ A1

Drawing Status: FOR APPROVAL
NOT TO BE USED FOR CONSTRUCTION PURPOSES

Drawing Title
STORMWATER CONCEPT DESIGN
LEVEL 3 PLAN

Project No	Drawing No	Revision No
20150209	SW04	B

DATE PLOTTED: 16 August 2016 4:53 PM BY : SGCEDMG4 \\Mac\SGCE_Data\Production\20150209 21 Atkinson Street, Liverpool\Civil\cad\SW04.dwg

A1

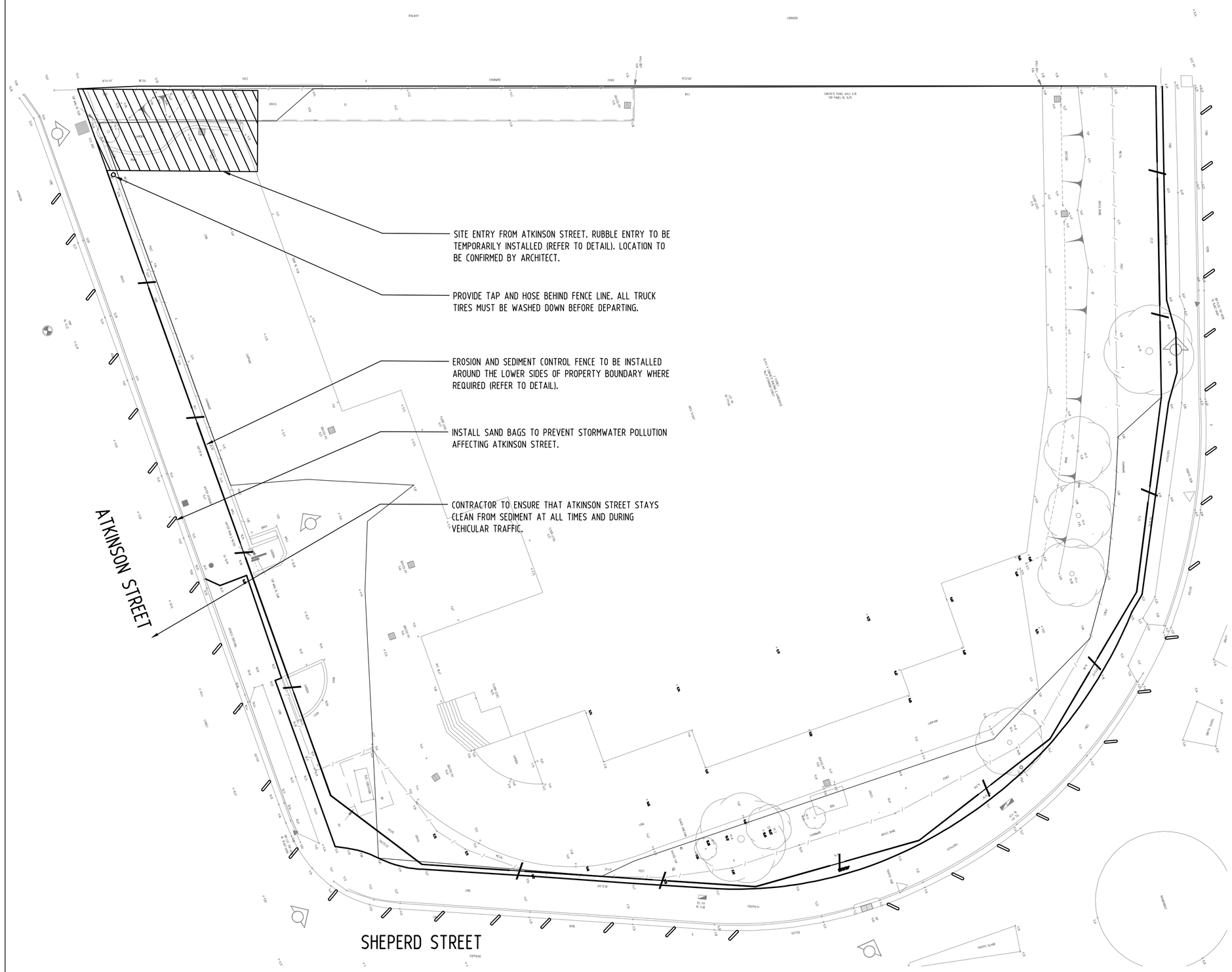

EROSION & SEDIMENTATION CONTROL NOTES

1. CONTRACTOR SHALL PROVIDE SEDIMENT FENCING MATERIAL DURING CONSTRUCTION TO THE LOW SIDE OF THE WORKS. TIE SEDIMENT FENCING MATERIAL TO CYCLONE WIRE SECURITY FENCE. SEDIMENT CONTROL FABRIC SHALL BE AN APPROVED MATERIAL (EG. HUMES PROPEX SILT STOP) STANDING 300mm ABOVE GROUND & EXTENDING 150mm BELOW GROUND.
2. EXISTING DRAINS LOCATED WITHIN THE SITE SHALL ALSO BE ISOLATED BY SEDIMENT FENCING MATERIAL.
3. NO PARKING OR STOCKPILING OF MATERIALS IS PERMITTED ON THE LOWER SIDE OF THE SEDIMENT FENCE.
4. GRASS VERGES SHALL BE MAINTAINED AS MUCH AS PRACTICAL TO PROVIDE A BUFFER ZONE TO THE CONSTRUCTION SITE.
5. CONSTRUCTION ENTRY/EXIT SHALL BE VIA THE LOCATION NOTED ON THE DRAWING. CONTRACTOR SHALL ENSURE ALL DROPPABLE SOIL & SEDIMENT IS REMOVED PRIOR TO CONSTRUCTION TRAFFIC EXITING SITE. CONTRACTOR SHALL ENSURE ALL CONSTRUCTION TRAFFIC ENTERING & LEAVING THE SITE DO SO IN A FORWARD DIRECTION.

GENERAL NOTES

1. THIS PLAN IS A CONCEPT PLAN ONLY FOR STORMWATER DISPOSAL & EROSION CONTROL. IT IS NOT SUITABLE FOR CONSTRUCTION. THIS PLAN SHOULD BE ADAPTED BY THE BUILDER DURING DEMOLITION, EXCAVATION & CONSTRUCTION PHASES TO ENSURE ADEQUATE PERFORMANCE.
2. ALL DRAINAGE LAYOUT & DETAILS ARE DIAGRAMMATIC & INDICATIVE ONLY. ACTUAL LOCATION, SIZES, LEVELS & GRADES MAY ALTER WHEN DETAIL DESIGN WORKS ARE DOCUMENTED.

CLAY SOILS

A SYSTEM SHALL BE INSTALLED TO EITHER:

1. TRANSPORT STORMWATER RUNOFF WITH SUSPENDED SOLIDS FROM SITE VIA PUMP TRUCKS.
2. TREAT THE STORMWATER RUNOFF WITH SUSPENDED SOLIDS SO THE DISCHARGE WATER QUALITY TO COUNCIL STORMWATER DRAINAGE SYSTEM HAS A MAXIMUM CONCENTRATION OF SUSPENDED SOLIDS THAT DOES NOT EXCEED 50 MILLIGRAMS PER LITRE IN ACCORDANCE WITH THE PROTECTION OF THE ENVIRONMENT OPERATION ACT (POEO 1997) AND SHALL BE APPROVED BY LOCAL COUNCIL

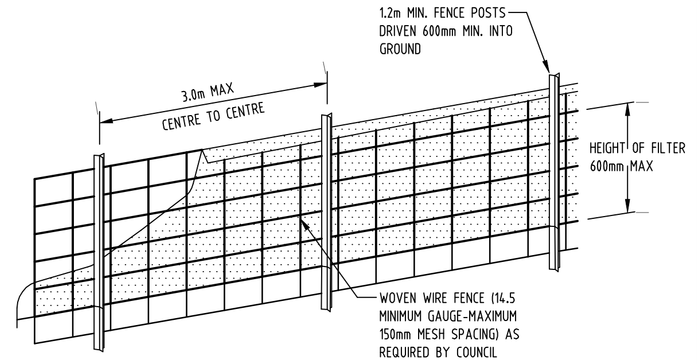

DIAGRAMMATIC VIEW

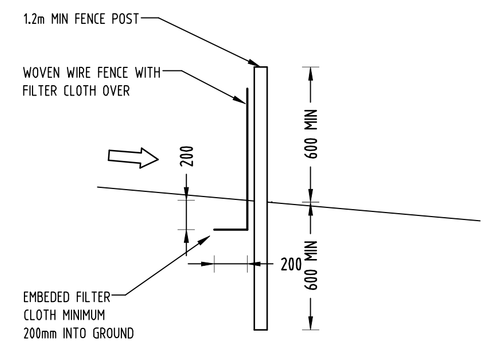

TYPICAL SECTION

4 - DETAIL
SEDIMENT FENCE
NOT TO SCALE

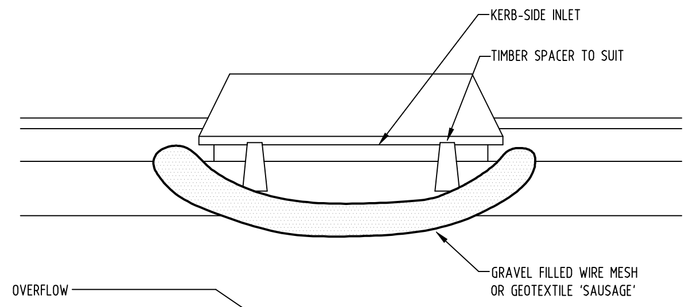

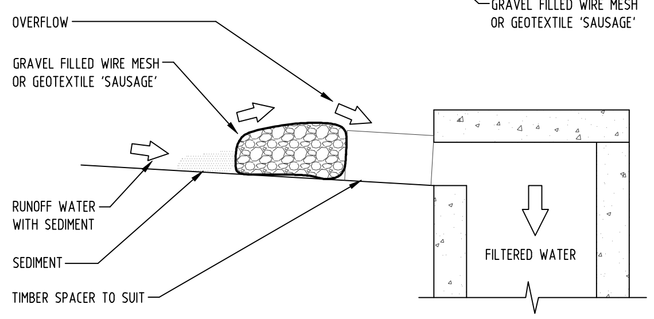

CONSTRUCTION NOTES:

FABRICATE A SLEEVE MADE FROM GEOTEXTILE OR WIRE MESH LONGER THAT THE LENGTH OF THE INLET PIT

FILL THE SLEEVE WITH 25mm TO 50mm GRAVEL

FORM AN ELLIPTICAL CROSS-SECTION OF THE KERB INLET LEAVING A 100mm GAP AT THE TOP TO ACT AS AN EMERGENCY SPILLWAY

MAINTAIN THE OPENING WITH SPACER BLOCKS

FORM A SEAL WITH THE KERBING AND PREVENT SEDIMENT BYPASSING THE FILTER

FIT TO ALL KERB INLETS AT SAG POINTS

3 - DETAIL
GRAVEL INLET FILTER (SAUSAGE)
NOT TO SCALE

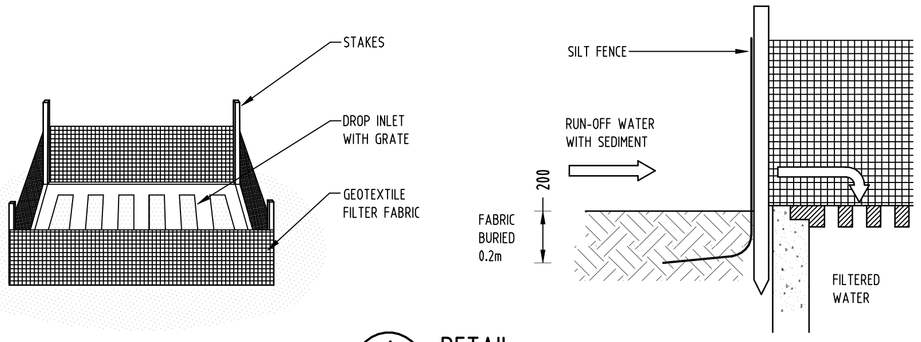

1 - DETAIL
SUMP SEDIMENT TRAP
NOT TO SCALE

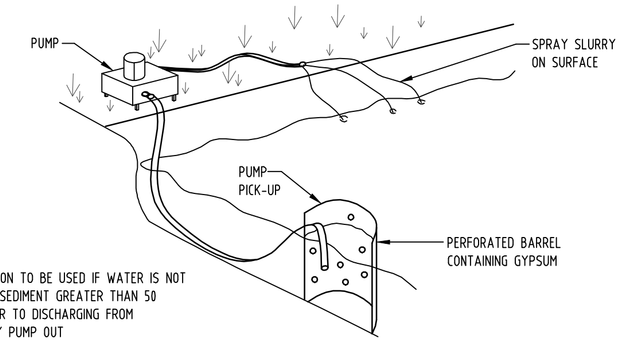

NOTE:

1. FLOCCULATION TO BE USED IF WATER IS NOT CLEAR (ie. SEDIMENT GREATER THAN 50 mg/L) PRIOR TO DISCHARGING FROM TEMPORARY PUMP OUT
2. FOR RATES & AGENTS SEE APPENDIX E OF NEW SOUTH WALES DEPARTMENT OF HOUSING "MANAGING URBAN STORMWATER SOILS & CONSTRUCTION".

2 - DETAIL
FLOCCULATION DETAIL
NOT TO SCALE

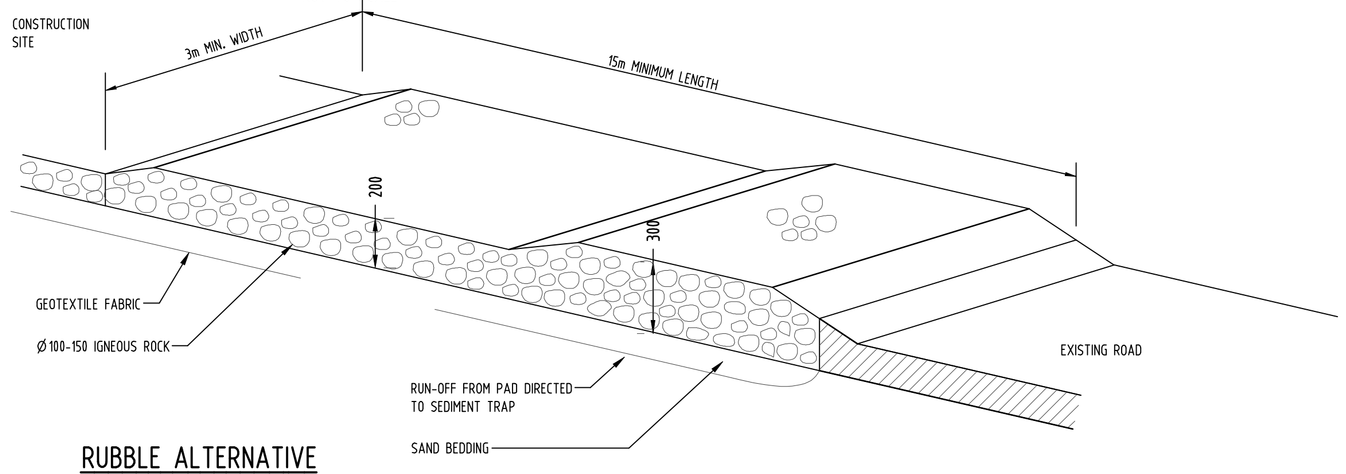

RUBBLE ALTERNATIVE

5 - DETAIL
TEMPORARY CONSTRUCTION EXIT
NOT TO SCALE

Issue	Last revision title	by	Date	Status
B	SUBMISSION TO COUNCIL	ZZ	16.08.16	2
A	SUBMISSION TO COUNCIL	ZZ	03.02.16	2

Issuer internal sequence and revision history
1-preliminary 2-development application 3-construction certificate 4-tender 5-construction 6-other

Reference Coordination Drawing

Discipline	Drawing Title and Number	Date	Rev.
ARCH	AP 04	09.08.16	#
ARCH			
STRUCT			
MECH			
ELEC			
HYD			
FIRE			
LANDS			
CIVIL			
SURVEY	DETL-001A	04.11.15	#

ENGINEERS AUSTRALIA Chartered Professional Engineer MEMBER

DIMENSIONS NOT SHOWN TO BE CHECKED ON SITE. DO NOT SCALE OF THIS DRAWING. POSITIONS OF AUTHORITIES MAINS AND/OR EXISTING SERVICES ARE TO BE CHECKED PRIOR TO COMMENCEMENT OF WORK. REPORT ANY DISCREPANCIES TO THE CONSULTING ENGINEER FOR DECISION/CLARIFICATION BEFORE PROCEEDING WITH THE WORK. THIS DRAWING IS TO BE READ IN CONJUNCTION WITH THE SPECIFICATIONS AND OTHER CONSULTANTS' DRAWINGS.

QUALITY CONTROL

DRAWN	DATE
CHECKED	DATE
DESIGNED	DATE
VERIFIED	DATE
APPROVED	DATE

WARNING: THE DESIGNS, DRAWINGS, SPECIFICATIONS AND THE COPYRIGHT HEREIN REMAIN THE SOLE INTELLECTUAL PROPERTY OF S&G CONSULTANTS PTY LTD AND MUST NOT BE USED, COPIED, ALTERED OR REPRODUCED WHOLLY OR IN PART IN ANY FORM WITHOUT THE WRITTEN CONSENT OF S&G CONSULTANTS PTY LTD

Scales
0m 2.5 5 7.5 10 12.5
SCALE 1:250 ON ORIGINAL SIZE

CLIENT
SYNERGY DEVELOPMENT GROUP

ARCHITECT
mosca pserras architects
p 02 9601 3244 f 02 9601 6336
a po box 3353, liverpool westfield nsw 2170

CONSULTING ENGINEER
S&G CONSULTANTS PTY LIMITED
A.B.N. 21 118 222 530
Ste 412, Level 4, 14-16 LEXINGTON DRIVE BELLA VISTA, NSW 2153
T: +61 2 8883 4239
F: +61 2 9672 6977
Email: office@sgce.com.au
Web: www.sgce.com.au

PROJECT
PROPOSED MULTI-UNIT FLAT BUILDING
21 ATKINSON STREET, LIVERPOOL

Grid	Datum	Sheet	Scale (at original size)
-	A.H.D.	5 of 7	1:250 @ A1

Drawing Status: FOR APPROVAL
NOT TO BE USED FOR CONSTRUCTION PURPOSES

Drawing Title
SEDIMENT AND EROSION CONTROL
PLAN AND DETAILS

Project No	Drawing No	Revision No
20150209	SW05	B

DATE PLOTTED: 16 August 2016 4:53 PM BY : SGCEMALL

XREF's: ©? CAD FILE: \\Mas\SGCE_Data\Production\2015\20150209 21 Atkinson Street, Liverpool\Grafx\cad\SW05.dwg

A1

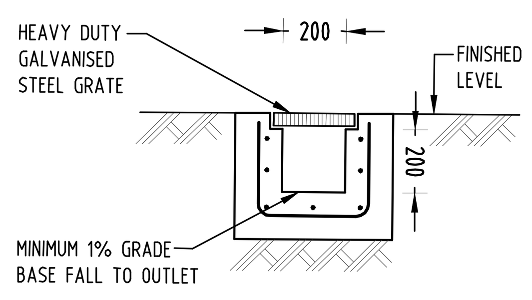

1 - DETAIL
GRATED TRENCH DRAIN
NOT TO SCALE

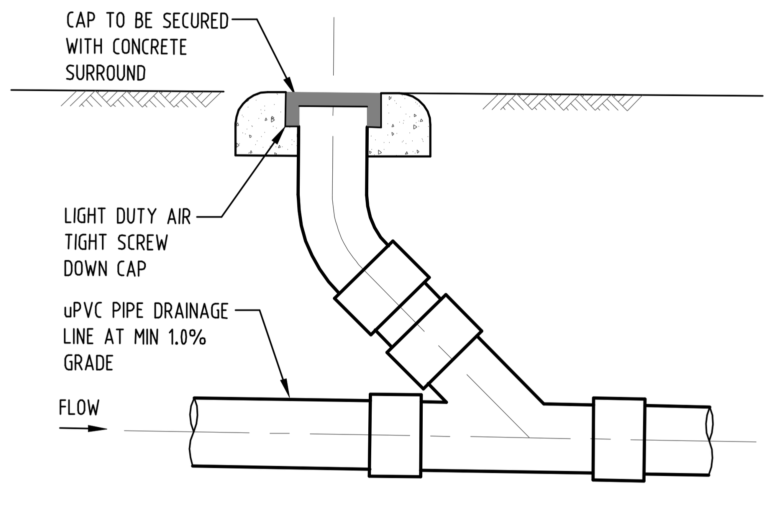

5 - DETAIL
CLEANING EYE
SCALE 1:10

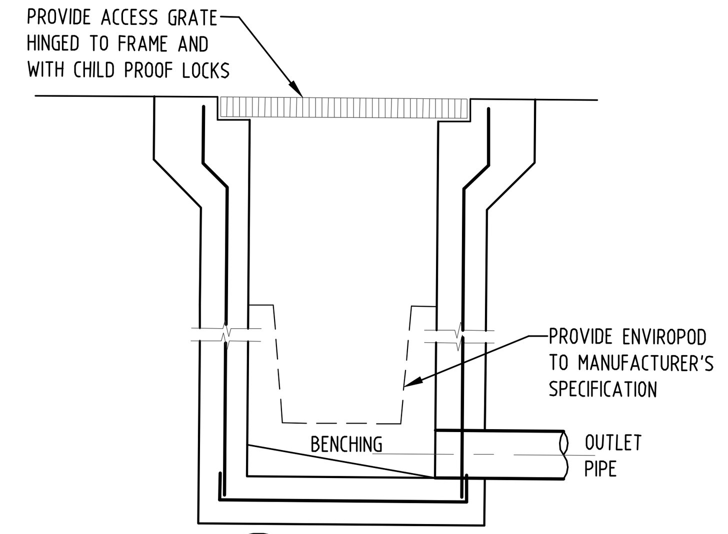

15 - DETAIL
STORMWATER PIT WITH ENVIO POD
SCALE 1:20

13 - DETAIL
CONFINED SPACE SIGN
SCALE 1:10

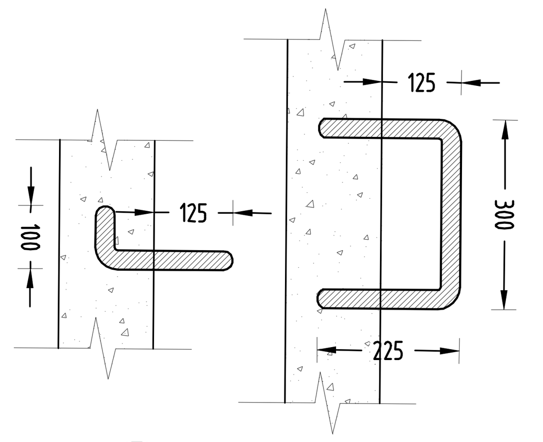

2 - DETAIL
STEP IRONS
SCALE 1:10

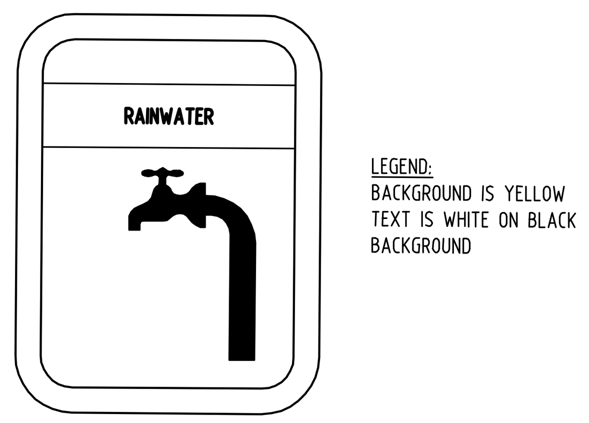

LEGEND:
BACKGROUND IS YELLOW
TEXT IS WHITE ON BLACK BACKGROUND

3 - DETAIL
RAINWATER SIGN
SCALE 1:20

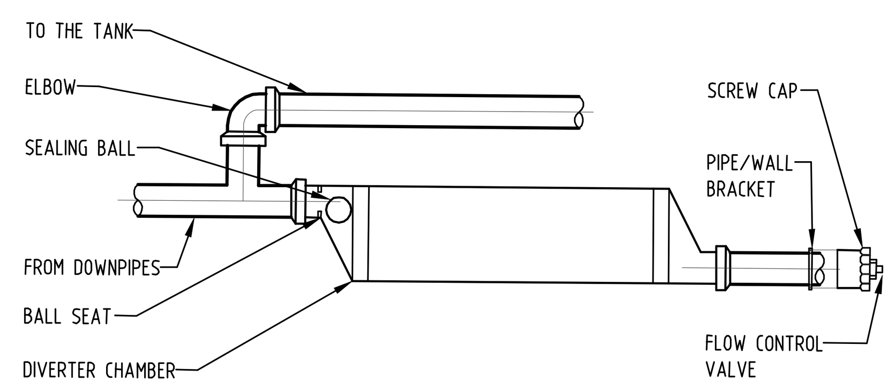

2 - DETAIL
IN-GROUND FIRST FLUSH DIVERTER
SCALE 1:20

DRAINAGE NOTES:

ALL PIPES TO BE LAID ON 75mm SAND BED WITH THE BARRELS FULLY SUPPORTED

100mm AND 150mm DIAMETER PIPES TO BE LAID ON MINIMUM 1% GRADE

MINIMUM DEPTH OF COVER FOR PIPES NOT SUBJECT TO VEHICULAR LOADING TO BE 300mm

ALL DRAINAGE PIPES LAID UNDER PAVEMENT SHALL BE REINFORCED CONCRETE WITH RUBBER RING JOINTS

BACKFILL TRENCHES WITH COMPACTED SAND OR APPROVED AGGREGATE MATERIAL

HEAVY DUTY GRATES AND COVERS ARE TO BE PROVIDED IN TRAFFICABLE AREAS

PIT GRATE TO BE TYPE WELDLOK OR APPROVED EQUIVALENT

ALL PITS SHALL BE PROVIDED WITH A LOCKING CLIP

ALL PITS SHALL BE MAINTAINED REGULARLY

TOP OF BENCHING SHALL BE TO THE HALF OF THE OUTLET PIPE DIAMETER

Ø100 SUBSOIL DRAINAGE PIPE 3000mm LONG WRAPPED IN FABRIC SOCK TO BE PROVIDED ADJACENT TO INLET PIPES

COMPRESSIVE STRENGTH f'c FOR CAST IN SITU CONCRETE TO BE A MINIMUM OF 20MPa AT 28 DAYS

ISOLATED JOINTS TO BE PROVIDED TO ISOLATE CONCRETE PAVEMENTS FROM PITS

ALL TRENCH GRATES PROVIDED SHALL HAVE A MINIMUM CLEAR WIDTH OF 200mm

STORMWATER DRAINAGE CONNECTIONS TO THE MAIN SYSTEM SHALL BE TO THE REQUIREMENTS AND THE SATISFACTION OF LOCAL COUNCIL

DESIGN NOTES:

THE SITE IS LOCATED IN LIVERPOOL CITY COUNCIL.

TOTAL SITE AREA = $1475.2m^2$

THE SITE IS WITHIN THE 100 YEAR ARI FLOOD EXTENT MAP. OSD IS NOT REQUIRED.

WSUD IS REQUIRED AS PER COUNCIL DCP.

LEGEND:

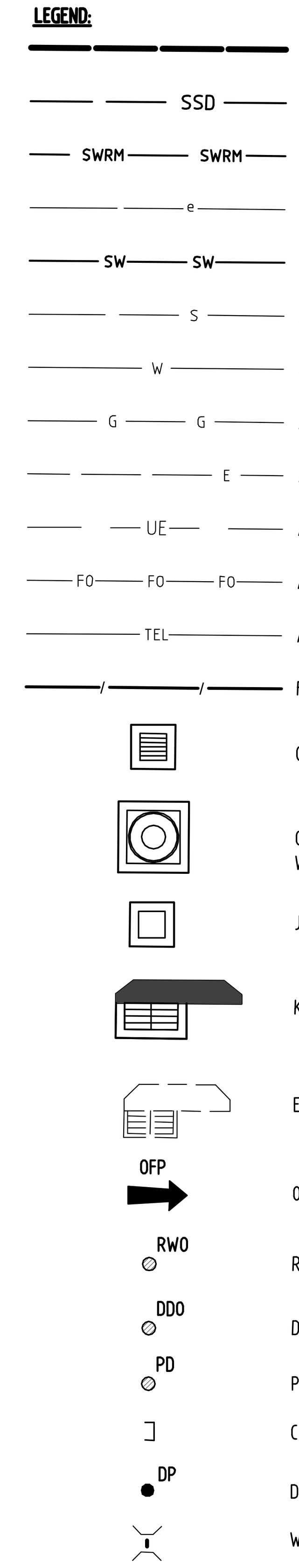

- STORMWATER LINE
- SUBSOIL LINE
- STORMWATER RISING MAIN
- EXISTING STORMWATER LINE
- AUTHORITY STORMWATER LINE
- AUTHORITY SEWER LINE
- AUTHORITY WATER LINE
- AUTHORITY GAS LINE
- AUTHORITY ELECTRICITY LINE
- AUTHORITY UNDERGROUND ELECTRICITY LINE
- AUTHORITY FIBRE OPTIC LINE
- AUTHORITY COMMS LINE
- FENCE LINE
- GRATED SURFACE INLET PIT
- GRATED SURFACE INLET PIT WITH ENVIROPOD INSERT
- JUNCTION PIT
- KERB INLET PIT
- EXISTING KERB INLET PIT
- OVERLAND FLOW PATH
- RAINWATER OUTLET
- DISH DRAIN OUTLET
- PLANTER DRAIN
- CAP
- DOWNPIPE
- WALL PENETRATION

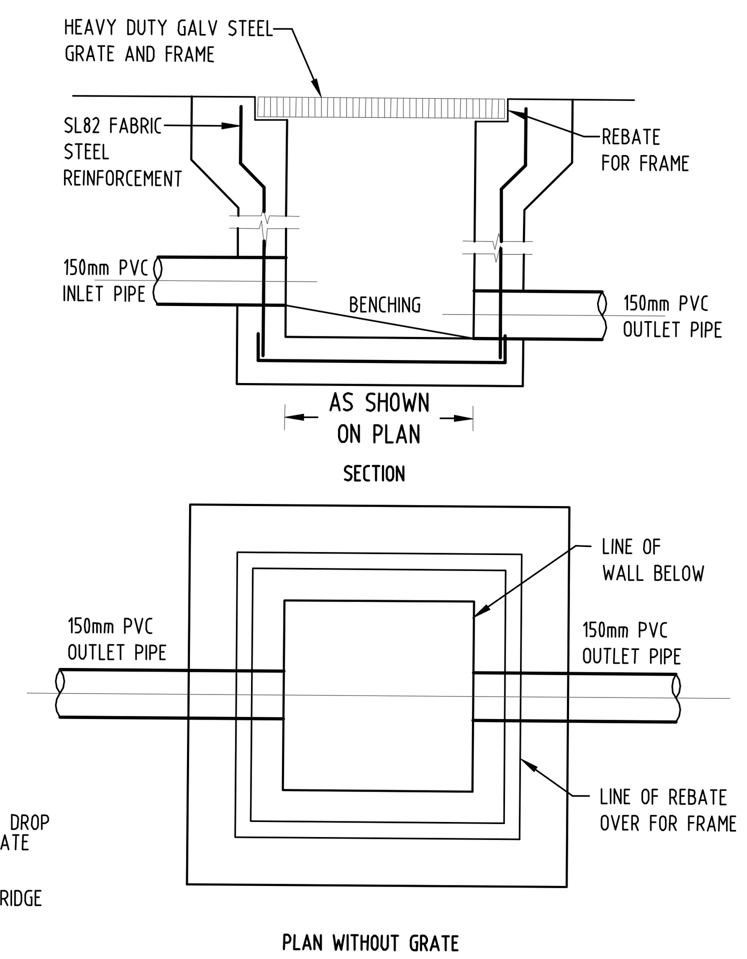

10 - DETAIL
STORMWATER PIT
SCALE 1:20

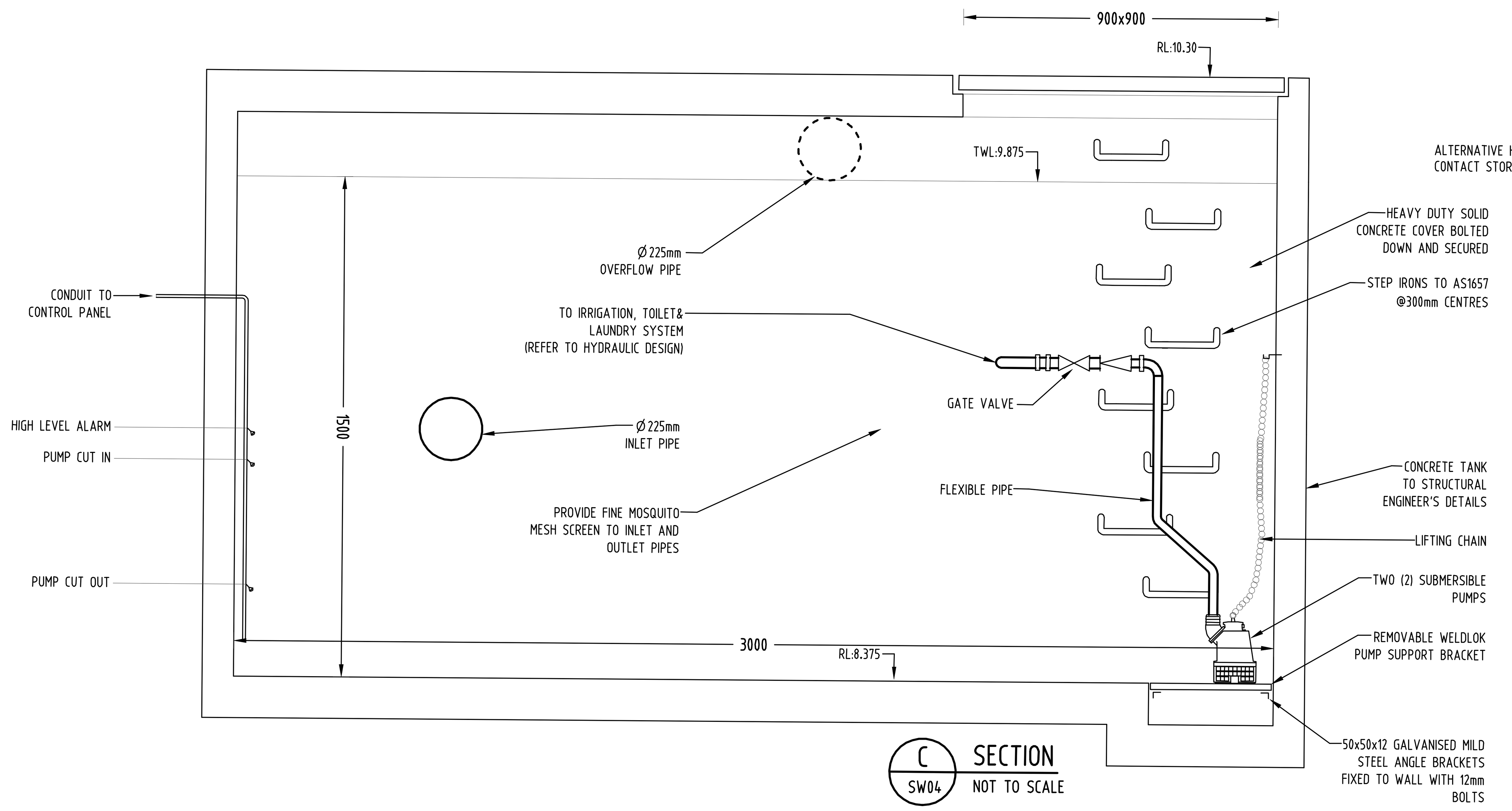

C / SW04 SECTION
NOT TO SCALE

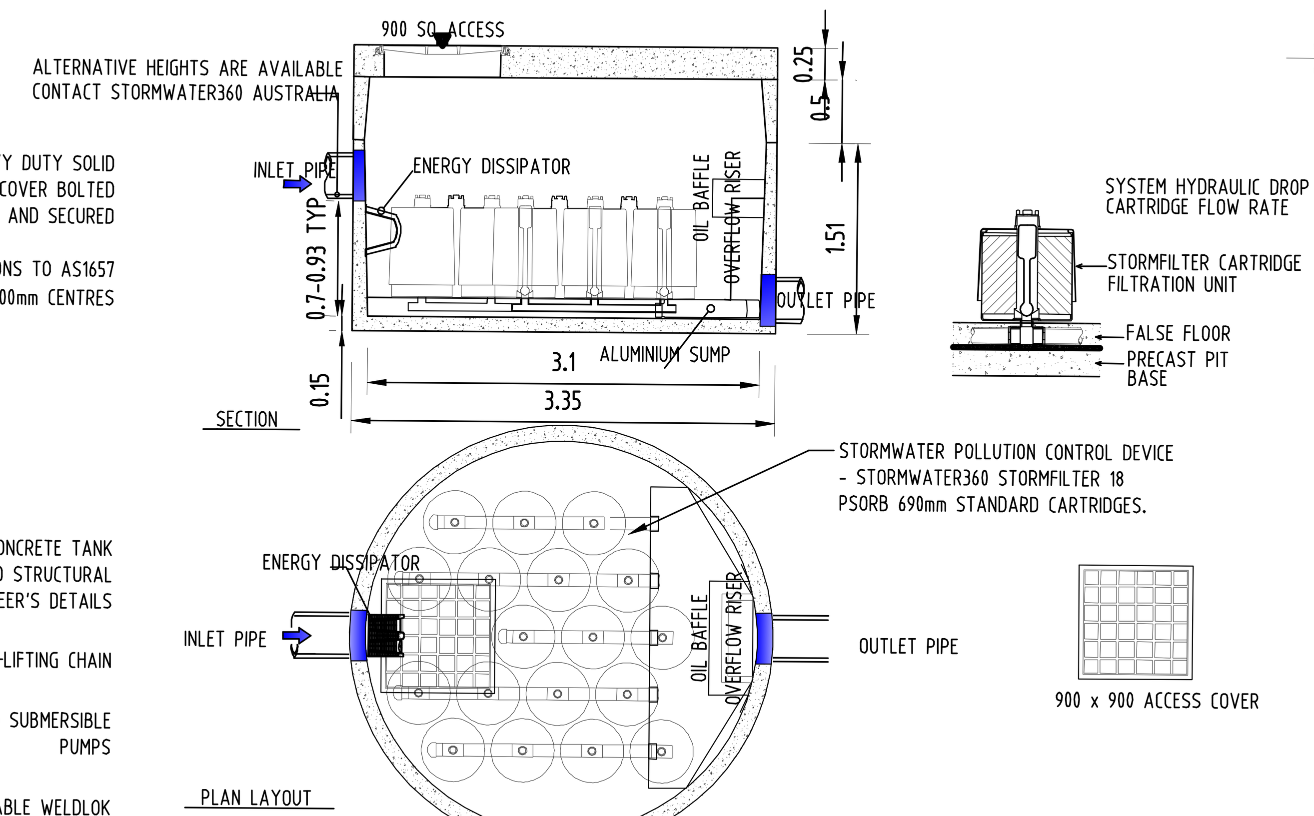

SERVICES SHOWN ON PLAN ARE INDICATIVE, EXACT DEPTH AND LOCATION TO BE CONFIRMED ONSITE. CONTRACTOR TO CARRY OUT DIAL BEFORE YOU DIG APPLICATION AND ENGAGE A REGISTERED SURVEYOR TO PEG OUT ALL EXISTING SERVICES PRIOR TO ANY WORK COMMENCING ONSITE.

AUTHORITY STORMWATER NOTES:

1. IT IS THE CONTRACTOR'S RESPONSIBILITY TO CHECK ALL SET OUT AND LEVELS PRIOR TO COMMENCEMENT OF WORKS AND TO REPORT ANY DISCREPANCIES FOUND TO THE SUPERINTENDANT.
2. ALL SET OUT DIMENSIONS ARE TO FACE OF KERB, CENTERLINE OF FENCE/BOLARD/PIPE.
3. SMOOTH ALL TRANSITIONS BETWEEN NEW AND EXISTING WORK IN BOTH LEVEL AND ALIGNMENT.
4. IT IS THE CONTRACTOR'S RESPONSIBILITY TO PROVIDE ALL SAFETY FENCES, WARNING SIGNS, TRAFFIC DIVERSIONS AND THE LIKE DURING CONSTRUCTION. ALL WORKS TO COMPLY WITH OCCUPATIONAL HEALTH AND SAFETY REQUIREMENTS AND OTHER RELEVANT AUTHORITY SAFETY REQUIREMENTS.
5. NO TREES SHALL BE REMOVED, CUTBACK OR RELOCATED WITHOUT THE WRITTEN INSTRUCTION FROM THE SUPERINTENDENT.
6. THE CONTRACTOR SHALL PROVIDE CERTIFICATION OF COMPACTION AND PAVEMENT THICKNESS FROM A NATA REGISTERED TESTING AUTHORITY. MINIMUM THREE TESTS PER LAYER AS FOLLOWS

	DENSITY INDEX 75
PIPE BACKFILL	DENSITY INDEX 75
SELECT FILL	95% STANDARD
SELECT FILL (LESS THAN 300mm BELOW BASE COURSE)	98% MODIFIED
BASE COURSE	100% MODIFIED

7. THE AUSPEC SPECIFICATION SHALL BE THE SPECIFICATION FOR THESE WORKS.

Issue	Last revision title	by	Date	Status
B	SUBMISSION TO COUNCIL	ZZ	16.08.16	2
A	SUBMISSION TO COUNCIL	ZZ	03.02.16	2

Issuer internal sequence and revision history
1-preliminary 2-development application 3-construction certificate
4-tender 5-construction 6-other

Reference Coordination Drawing

Discipline	Drawing Title and Number	Date	Rev.
ARCH			
ARCH			
STRUCT			
MECH			
ELEC			
HYD			
FIRE			
LANDS			
CIVIL			
SURVEY			

ENGINEERS AUSTRALIA Chartered Professional Engineer MEMBER

DIMENSIONS NOT SHOWN TO BE CHECKED ON SITE. DO NOT SCALE OF THIS DRAWING. POSITIONS OF AUTHORITIES MAINS AND/OR EXISTING SERVICES ARE TO BE CHECKED PRIOR TO COMMENCEMENT OF WORK. REPORT ANY DISCREPANCIES TO THE CONSULTING ENGINEER FOR DECISION/CLARIFICATION BEFORE PROCEEDING WITH THE WORK. THIS DRAWING IS TO BE READ IN CONJUNCTION WITH THE SPECIFICATIONS AND OTHER CONSULTANTS' DRAWINGS.

QUALITY CONTROL

DRAWN	DATE
CHECKED	DATE
DESIGNED	DATE
VERIFIED	DATE
APPROVED	DATE

WARNING: THE DESIGNS, DRAWINGS, SPECIFICATIONS AND THE COPYRIGHT HEREIN REMAIN THE SOLE INTELLECTUAL PROPERTY OF S&G CONSULTANTS PTY LTD AND MUST NOT BE USED, COPIED, ALTERED OR REPRODUCED WHOLLY OR IN PART IN ANY FORM WITHOUT THE WRITTEN CONSENT OF S&G CONSULTANTS PTY LTD

Scales
0m 0.1 0.2 0.3 0.4 0.5
SCALE 1:10 ON ORIGINAL SIZE
0m 0.2 0.4 0.6 0.8 1.0
SCALE 1:20 ON ORIGINAL SIZE

CLIENT
SYNERGY DEVELOPMENT GROUP

ARCHITECT
mosca pserras architects
p 02 9601 3244 f 02 9601 6336
a po box 3353, liverpool westfield nsw 2170

CONSULTING ENGINEER
S&G CONSULTANTS PTY LIMITED
A.B.N. 21 118 222 530
sgc
Ste 412, Level 4,
14-16 LEXINGTON DRIVE
BELLA VISTA, NSW 2153
T: +61 2 8883 4239
F: +61 2 9672 6977
Email: office@sgce.com.au
Web: www.sgce.com.au

PROJECT
PROPOSED MULTI-UNIT FLAT BUILDING
21 ATKINSON STREET, LIVERPOOL

Grid	Datum	Sheet	Scale (at original size)
-	A.H.D.	6 of 7	1:100 @ A1

Drawing Status
FOR APPROVAL
NOT TO BE USED FOR CONSTRUCTION PURPOSES

Drawing Title
STORMWATER CONCEPT DESIGN
DETAILS SHEET

Project No	Drawing No	Revision No
20150209	SW06	B

XREF's: $?
CAD FILE: \\Mac\SGCE_Data\Production\2015\20150209 21 Atkinson Street, Liverpool\Civil\cad\SW06.dwg

A1

DATE PLOTTED: 16 August 2016 4:54 PM BY : SGCEMALS

ROOF AREA TO RWT (1557m2)

ROOF AREA TO SF (1129m2)

LANDSCAPING AREA TO SF (176m2)

PAVED AREA TO SF (2391m2)

EASEMENT (159m2)

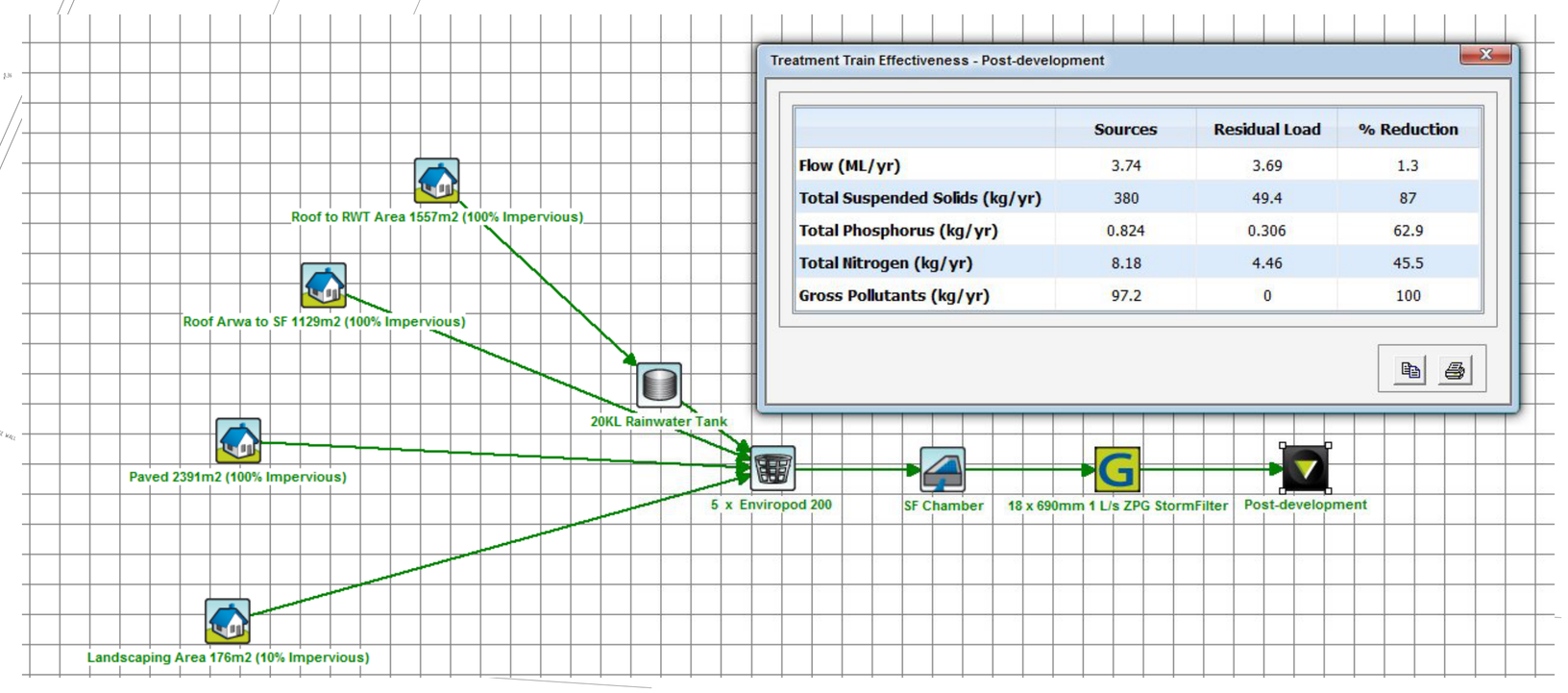

Treatment Train Effectiveness - Post-development

	Sources	Residual Load	% Reduction
Flow (ML/yr)	3.74	3.69	1.3
Total Suspended Solids (kg/yr)	380	49.4	87
Total Phosphorus (kg/yr)	0.824	0.306	62.9
Total Nitrogen (kg/yr)	8.18	4.46	45.5
Gross Pollutants (kg/yr)	97.2	0	100

Issue	Last revision title	by	Date	Status
B	SUBMISSION TO COUNCIL	ZZ	16.08.16	2
A	SUBMISSION TO COUNCIL	ZZ	03.02.16	2

Issuer internal sequence and revision history

1-preliminary 2-development application 3-construction certificate
4-tender 5-construction 6-other

Reference Coordination Drawing

Discipline	Drawing Title and Number	Date	Rev.
ARCH			
ARCH			
STRUCT			
MECH			
ELEC			
HYD			
FIRE			
LANDS			
CIVIL			
SURVEY			

ENGINEERS AUSTRALIA
Chartered Professional Engineer
MEMBER

DIMENSIONS NOT SHOWN TO BE CHECKED ON SITE. DO NOT SCALE OF THIS DRAWING. POSITIONS OF AUTHORITIES MAINS AND/OR EXISTING SERVICES ARE TO BE CHECKED PRIOR TO COMMENCEMENT OF WORK. REPORT ANY DISCREPANCIES TO THE CONSULTING ENGINEER FOR DECISION/CLARIFICATION BEFORE PROCEEDING WITH THE WORK. THIS DRAWING IS TO BE READ IN CONJUNCTION WITH THE SPECIFICATIONS AND OTHER CONSULTANTS' DRAWINGS.

QUALITY CONTROL

DRAWN	DATE
CHECKED	DATE
DESIGNED	DATE
VERIFIED	DATE
APPROVED	DATE

WARNING: THE DESIGNS, DRAWINGS, SPECIFICATIONS AND THE COPYRIGHT HEREIN REMAIN THE SOLE INTELLECTUAL PROPERTY OF S&G CONSULTANTS PTY LTD AND MUST NOT BE USED, COPIED, ALTERED OR REPRODUCED WHOLLY OR IN PART IN ANY FORM WITHOUT THE WRITTEN CONSENT OF S&G CONSULTANTS PTY LTD

Scales

0m 2 4 6 8 10
SCALE 1:200 ON ORIGINAL SIZE

CLIENT
SYNERGY
DEVELOPMENT GROUP

ARCHITECT
mpa
mosca pserras architects
p 02 9601 3244 f 02 9601 6336
a po box 3353, liverpool westfield nsw 2170

CONSULTING ENGINEER
S&G CONSULTANTS PTY LIMITED
A.B.N. 21 118 222 538
sgc
Ste 412, Level 4,
14-16 LEXINGTON DRIVE
BELLA VISTA, NSW 2153
T: +61 2 8883 4239
F: +61 2 9672 6977
Email: office@sgce.com.au
Web: www.sgce.com.au

PROJECT
PROPOSED MULTI-UNIT
FLAT BUILDING
21 ATKINSON STREET, LIVERPOOL

Grid	Datum	Sheet	Scale (at original size)
-	A.H.D.	7 of 7	1:200 @ A1

Drawing Status: FOR APPROVAL
NOT TO BE USED FOR CONSTRUCTION PURPOSES

Drawing Title
STORMWATER CONCEPT DESIGN
MUSIC CATCHMENT PLAN

Project No	Drawing No	Revision No
20150209	SW07	B

PLOT FILE: \\Macs\SGCE_Data\Production\2015\20150209 21 Atkinson Street, Liverpool\Cad\cad\SW07.dwg